10x10 Frame Tent

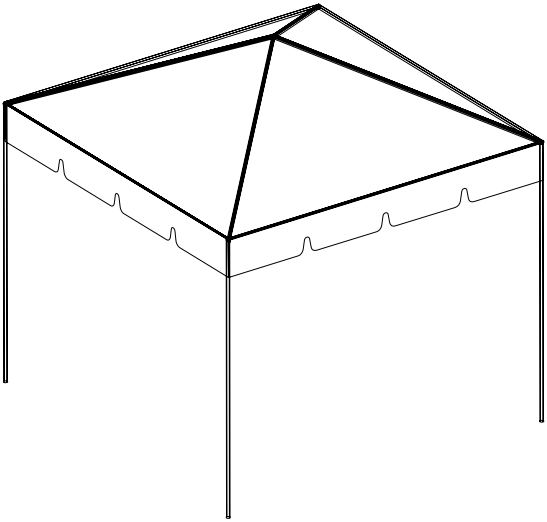

Fittings		
4	Corner	C1001
1	4 Way Crown	C1005
24	Canopy Pins	P102

Poles			Color
4	9'4"	Spreader	White
4	6'10"	Hip Rafter	Yellow
4	7'8"	Legs	Black

Frame Options
1 in. Frame
2 in. Frame Note: Hip rafter (6'10") should be 1 in. only.

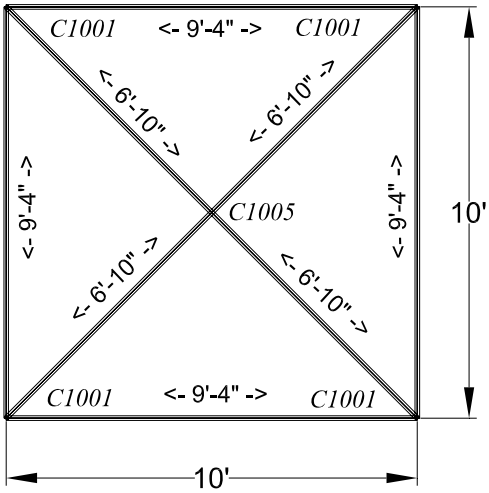

Tops Options
White 13oz. Translucent
White 15oz. Blackout
Colors (Solid or stripe)
Expandable 2 pieces. Velcro only—no buckles

Accessories	
4	Base Plates
4	Corner Leg Braces
8	Ratchet ropes and Stakes (4 Minimum)
40	Feet—Sidewall

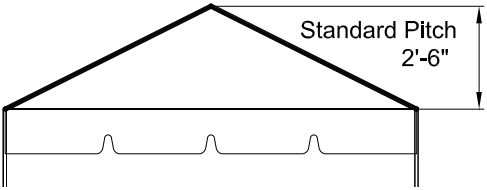

Central Tent — Commercial Frame Tent — Central Tent — Quality Frame Tent — Central Tent — Commercial Frame Tent — Central Tent — Quality Frame Tent — Central Tent — Commercial Frame Tent — Central Tent — Quality Frame Tent — Central Tent — Commercial Frame Tent — Central